Product code: F100G-S14-O

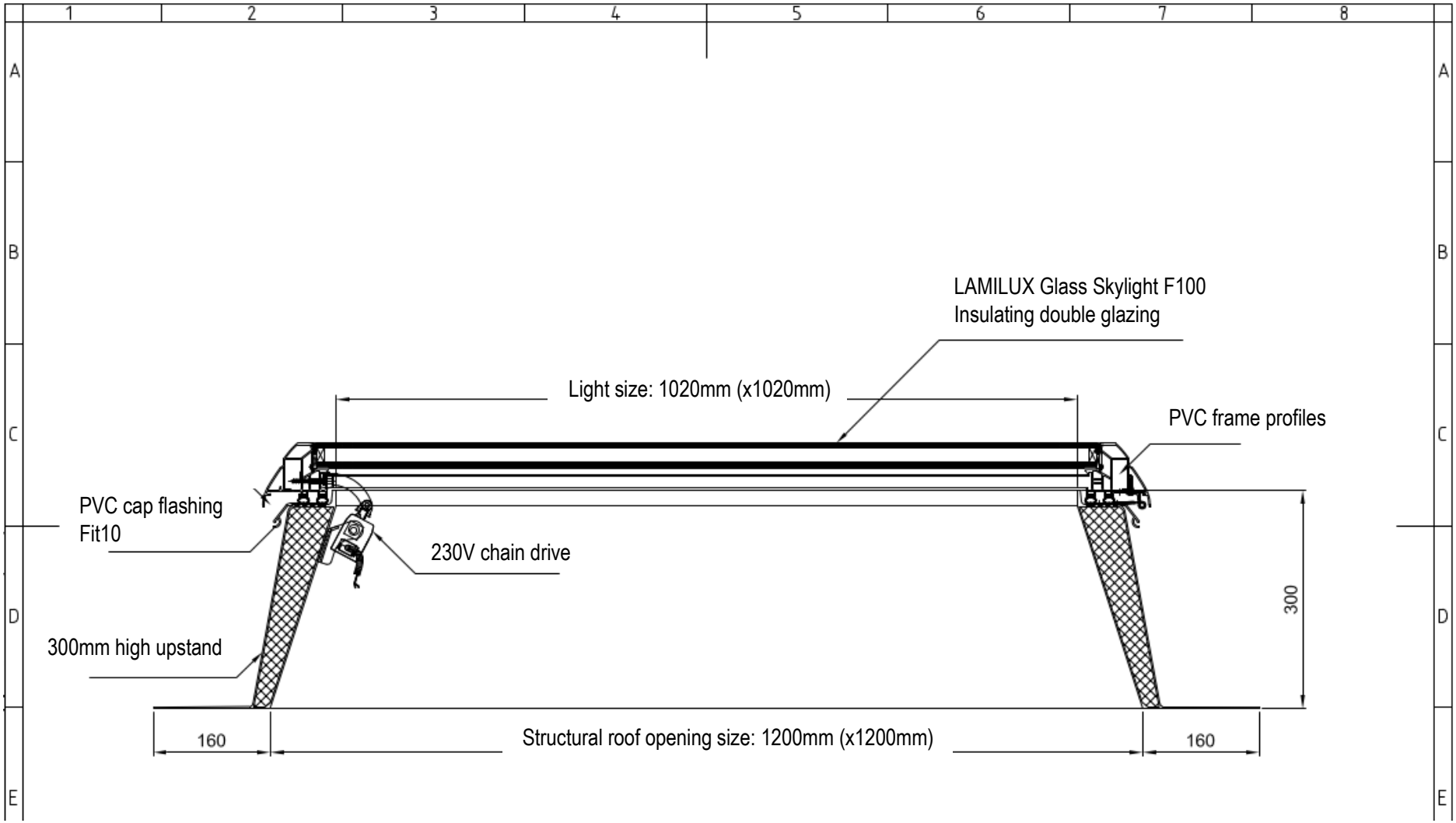

LAMILUX U.K LIMITED | Suite 1 Beacon House, Kempson Way, Bury St Edmunds, Suffolk. IP32 7AR
T: 01284 749051 | E: sales@lamiluxskylights.co.uk | W: www.lamiluxskylights.co.uk | Registered in England Reg. No.: 07476237